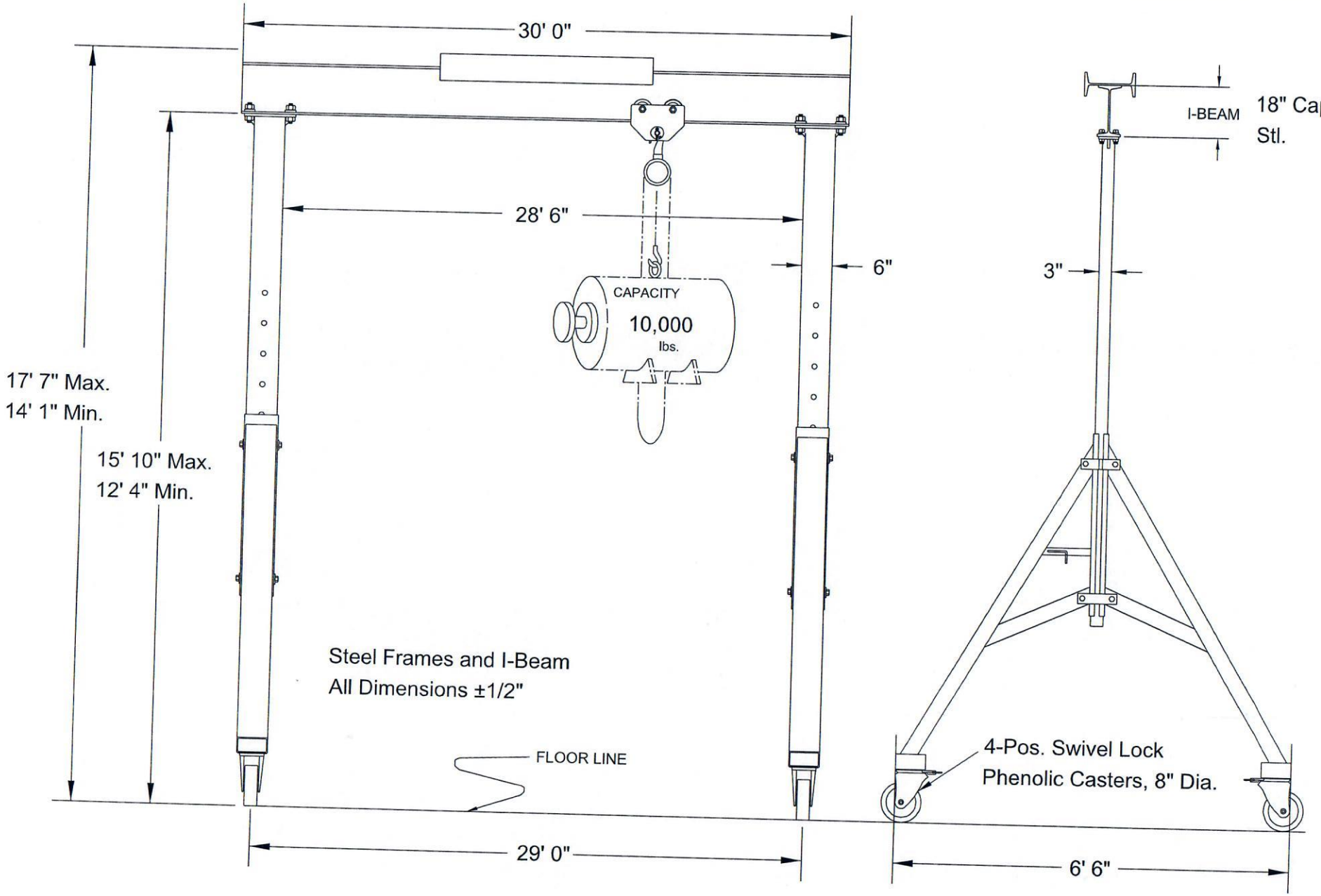

Model 1015-M30AC

© Copyright Wallace Cranes 2018. All rights reserved.

WALLACE CRANES THE ORIGINAL

SYM	DESCRIPTION	DATE	INT
	CONVERTED TO CAD DRAWING		

REVISIONS

UNLESS OTHERWISE SPECIFIED
DIMENSIONS ARE IN INCHES
TOLERANCES ON
FRACTION ±1/2" DECIMAL ±0.5"

DRAWN BY JIF DATE 3-13-18
CHECKER
APPROVAL

Wallace Cranes
MALVERN, PENNSYLVANIA

TITLE THRIFTY GANTRY ADJUSTABLE

SCALE NTS | WT | DWG SIZE C | DRAWING No. | REV.