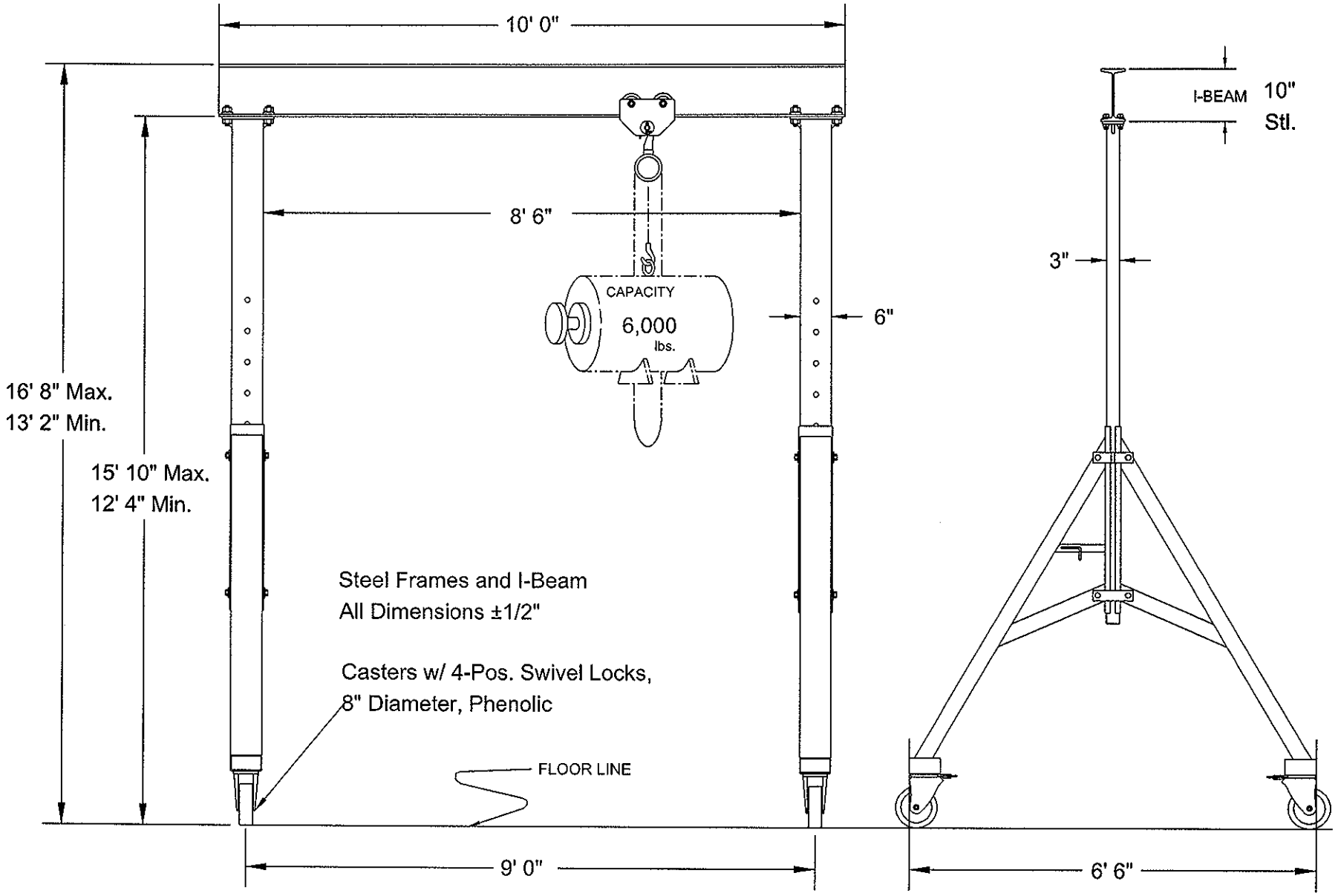

Model 615-10AC

© Copyright Wallace Cranes 2014. All rights reserved.

WALLACE CRANES

CONVERTED TO CAD DRAWING

SYM.	DESCRIPTION	DATE	INT.

REVISIONS

UNLESS OTHERWISE SPECIFIED
DIMENSIONS ARE IN INCHES
TOLERANCES ON
FRACTION ±1/2" DECIMAL ±0.1"

DRAWN BY JIF
DATE 10-14-14
CHECKER
APPROVAL

Wallace Cranes
MALVERN, PENNSYLVANIA

TITLE THRIFTY GANTRY ADJUSTABLE

SCALE NTS
WT.
DWG SIZE C
DRAWING No.
REV.